THESE NOTES SHALL BE READ IN CONJUNCTION WITH ISSUED SPECIFICATIONS AND WHERE IN CONFLICT THE ENGINEER SHALL BE CONTACTED FOR CONFIRMATION

1. GENERAL:

1.1. These drawings to be read in conjunction with all relevant architectural and service engineers drawings and specifications.

1.2. All levels shown are finished floor levels (u.n.o.)

1.3. All tolerances to be in accordance with relevant British/Irish standards (u.n.o.)

2. SITE DEVELOPMENT:

2.1. Topsoil may be stored on site for re-use. Excavated material is to be classified by appointed person(s) and either re-used on site, stored on site or removed off site.

2.2. Excavate to formation level over proposed building site generally. Dig out soft spots, if any, to good ground as per Engineers instructions and backfill with T.0 structural fill for depths >900mm and T.1 structural fill for depths <900mm under slabs and C12/15 mass concrete under foundations.

2.3. All excavations to be kept free of ground water.

2.4. All stone filling to be T.0 structural fill for depths >900mm and T.1 structural fill for depths <900mm u.n.o.

2.5. Base material under ground slab to be T.0 structural fill for depths >900mm and T.1 structural fill for depths <900mm compacted in layers, max depth 225mm with a vibrating roller.

2.6. All existing services or drainage runs under proposed building to be haunched in concrete, C16/20 minimum 150mm cover.

3. FOUNDATIONS:

3.1. Excavations to be kept dry until blinding concrete has been poured and again during steel fixing and pouring of foundations.

3.2. Soft spots under foundations to be made good to underside of bases and strips in C12/15 concrete.

3.3. Backfill around foundations to be T.0 structural fill for depths >900mm and T.1 structural fill for depths <900mm placed and compacted as per specification.

3.4. For arrangement of holding down bolts cast into foundations and pedestals refer to engineer's drawing's and also structural steelwork sub-contractor's details.

3.5. All foundations centered on columns and walls u.n.o.

4. DRAINAGE:

4.1. Refer to architects drawing's for details of all internal drainage within building.

4.2. All external foul water and surface water drainage to be constructed of concrete/thermoplastic/pvc pipe u.n.o.

4.3. All foul water and surface water drainage to be constructed in accordance with the standard drainage details, notes and specification

4.4. All drainage runs (new & existing) under building or hardstanding areas to be encased in concrete as per standard details.

4.5. For alternative drainage pipe material or double contained drainage refer to relevant notes as applicable.

4.6. Drainage construction must comply with the requirements of the building regulations and TII specification for road works in preference to all other specifications u.n.o.

4.7. All drainage must be tested and comply with the requirements of IS EN 752:2008.

4.8. Thrust block details (in absence of mechanical engineer's details.):

A. Thrust blocks are to be positioned at each hydrant, tee, bend and change in direction of firemain.

B. Thrust blocks should be of concrete strength C16/20 u.n.o.

C. Thrust blocks should be cast in-situ to fit snugly against as much of the fitting as possible without interfering with access to fitting joints and should bear against an area of undisturbed soil in the trench wall.

D. Thrust blocks should be of concrete mix not leaner than one part cement, two and a half parts sand, and five parts stone or washed gravel.

E. After installation, rods, nuts, bolts, washers, clamps, and other restraining devices except thrust blocks shall be cleaned and thoroughly coated with a bituminous or other acceptable corrosion retarding material.

5. THERMOPLASTIC DRAINAGE:

5.1. All thermoplastic drainage shall be of polyethylene or polypropylene.

5.2. The installation shall be carried out by fully qualified personnel trained and experienced in the installation of thermoplastic piping.

5.3. Drains shall be pressure tested to an agreed pressure prior to covering up. results of tests sent to the engineer for inspection.

6. SERVICE TRENCHING DETAILS:

6.1. Trench bottom prepared to an even finish and kept free of water.

6.2. Bottom of trench to be of consolidated soil. Where this does not occur hardcore lining must be laid.

6.3. Where underground services pass under any road, building or carpark etc, they are to be bedded and surrounded in C12/15 concrete.

6.4. Backfill for first 300mm above service run with CI.503 material suitably compacted. Backfill shall be tamped in layers under 150mm to prevent settlement or lateral movement and shall contain no ashes, cinders, refuse, organic matter, or other corrosive materials.

6.5. Where services are required to be tested prior to backfilling this must be carried out to the specification of the relevant authority or engineer and signed off in writing before commencing covering up of works.

7. CONCRETE:

7.1. All concrete work shall be in accordance with IS EN 1992-1-1:2004 "Design of Concrete Structures General Rules and Rules for Buildings".

7.2. Concrete grade to all elements to be grade C25/30. 20mm aggregate with a minimum cement content of 320kg/m & a maximum free water/cement ratio of 0.55 u.n.o.

7.3. Blinding concrete to be grade C12/15 u.n.o.

8. CONCRETE FINISHES (IN ACCORDANCE WITH NRA SERIES 1700 SPECIFICATION FOR ROAD WORKS):

8.1. Interior floor slabs to be type 'U3' (u.n.o.).

8.2. All other surfaces to be type 'F2' (u.n.o.).

9. MASONRY:

9.1. All masonry shall be in accordance with the specification and IS EN 1996-1-1:2005.

9.2. Solid blocks to be category 1 manufactured concrete masonry units and hollow blocks to be category 1 manufactured concrete masonry units both in accordance with IS EN 771-3:2011.

9.3. Concrete blocks shall be in accordance with IS EN 771-1:2011 with a minimum normalised compressive strength of 7.5N/mm^2 u.n.o.

9.4. Mortar designation to be type M4, 1:1:5 to 6 in accordance with IS EN 1996-1-1:2005 u.n.o.

9.5. Lintels in blockwork shall be prestressed concrete lintels u.n.o.

9.6. Inner and outer cavity leaves to be tied together with proprietary wall ties to IS EN 845-1:2013. Wall ties to be spaced at maximum 450mm centres vertically and horizontally, staggered, in wall panels. Ties to be spaced at 225mm centres at panel ends, openings, etc.

9.7. Control joints to be at 6 meter centres (max) in blockwork and 12 meter centres in brickwork.

10. CONCRETE GROUND SLABS:

10.1. Ground slabs to be as noted on drawings with a maximum 20mm limestone aggregate. Ground slab is to be cast on insulation and DPM to architect's specification with a minimum 225mm taped laps, on sand or concrete blinding, as noted, on hardcore.

10.2. Insulation shall be placed around the perimeter or the body of the slab to architect's details.

10.3. Slab to be reinforced with steel as per drawings

10.4. Hardcore to be T.0 structural fill for depths >900mm and T.1 structural fill for depths <900mm on rolled formation, both well compacted to the TII "Specification for Roadworks".

10.5. Slab finish to be power floated and trowelled to final tolerances, specified below unless noted otherwise by architect.

10.6. Slab finish level tolerances to be as follows or in accordance with specification.

10.6.1. As per section 4 of TR34

10.6.2. As per Table 4.1 of TR34

10.7. Floor classification FM3 as per Table 4.1 of TR34

10.8. Steps or lips at joints shall not exceed +/- 3.0 mm.

10.9. All joints shall be sealed using 2 pack polysulphide sealant, 6mm wide x 10mm deep. any excess cut above 10mm deep shall be suitably backed to ensure maximum 10mm depth of sealants.

10.10. Joints shall be saw cut 6mm wide x 1/4 slab depth deep in a straight line as per drawings.

10.11. All proprietary materials shall be used strictly in accordance with manufacturers specification and recommendation.

10.12. Soft spots under formation to be removed and backfilled with T.0 structural fill for depths >900mm and T.1 structural fill for depths <900mm.

11. STEELWORK:

11.1. All steelwork to be in accordance with IS EN 1993:2005 and the "National Structural Steelwork Specification for Building Construction".

11.2. All steelwork to be mild steel, grade S275 to IS EN 10025-1:2005 u.n.o.

11.3. Steel drawings are to be used for tender purposed only and should not be used in preparation of any shop drawings without prior written approval by the engineer.

11.4. All bolts to be grade 8.8 bolts u.n.o.

11.5. All welds to be minimum 6mm continuous fillet welds, with electrodes to BS EN ISO 2560:2009. u.n.o.

11.6. Mill certificates for all steel must be supplied to the engineer before fabrication.

11.7. Temporary bracing to be provided to engineers satisfaction.

11.8. Levels, dimensions etc. must be verified on site by the successful tenderers prior to production of shop drawings.

11.9. Setting out of steel to section 9 of the "National Structural Steel Specification for Buildings".

11.10. Site welds are not permitted.

12. CORROSION PROTECTION:

12.1. All steelwork to be removed of all burrs, projections, makers labels etc. to ensure a smooth finish.

12.2. After fabrication, all steelwork should be blast cleaned, to remove all grease, rust, dirt etc. to grade Sa2.5 as per ISO 8501-1:2007.

12.3. Particular attention should be paid to removal of weld spatter and weld flux residues (see also BS EN ISO 8501-1 & BS EN ISO 8501-2)

12.4. Unless noted otherwise all steelwork shall be coated with 80 microns d.f.t. of zinc phosphate epoxy fabrication primer followed by 100 microns d.f.t. of high build epoxy mio followed by 60 microns d.f.t. of polyurethane finish.

12.5. All steelwork noted as galvanised on drawings shall be hot dip galvanised to i.s. en iso 1461: 2009, (minimum 85 microns d.f.t.).where galvanized steelwork is affected by white corrosion products they should be removed with a stiff brush, washed and dried before painting.

12.6. Any coated surfaces damaged during either transport or erection shall be touched up and made good by the contractor.

12.7. Any site welds and surrounding affected steelwork should be treated in such a manner as to achieve the original standard of preparation and coating.

12.8. Cosmetic painting of steelwork to be in accordance with architects requirements.

13. WELDING:

13.1. All welds shall be 6mm continuous fillet welds (u.n.o.)

13.2. Electrode strength is to match highest grade of connected parent steel member.

13.3. All welding and weld testing is to be carried out strictly in accordance with section 5, of the "National Structural Steelwork Specification for Building Construction".

13.4. In particular, all necessary welds are to be tested by an approved independent weld testing authority and their reports are to be submitted to the Engineer for review. Any rectification work required as a result of these tests is to be carried out by the steelwork fabricator. The costs associated with all of the above are to be borne by the steelwork fabricator.

14. TIMBER:

14.1. All timber to be according to IS EN 1995-1-1:2004 "Eurocode 5. Design of Timber Structures. General: Common Rules and Rules for Buildings".

14.2. All timber to be grade C16 strength class in accordance with BS 4978:2007 "Timber Grades for Structural Use" u.n.o.

15. REINFORCEMENT:

15.1. This drawing is to be read in conjunction with all relevant reinforcement drawings & schedules.

15.2. Do not scale, use figured dimensions only.

15.3. All reinforcement to comply with BS 4483:2005 and to be grade B500:

15.4. All reinforcement scheduled as per BS 4466 1989.

15.5. Cover to main reinforcement of structural elements to be as follows u.n.o. :

Columns, beams etc. - 40mm
Slabs - 35mm
Foundations - 50mm

15.6. Mill and test certificates for reinforcement to be supplied to the engineer as directed.

Notation:

AP = Alternatively Placed
STGD = Staggered
T = Top
B = Bottom
UB = U-Bars
EF = Each Face
NF = Near Face
FF = Far Face
BB = Bottom Layer of Reinforcement
TT = Top Layer of Reinforcement

16. CONTRACTOR:

16.1. The contractor is responsible for executing the works in a safe and tidy manner.

16.2. The contractor is responsible for carrying out the works in accordance with the drawings and specifications provided and also in accordance with good building practice.

16.3. The contractor is responsible for ensuring that the the works comply with the requirements of the building regulations, health and safety regulations and all other legislation regulations to the works.

16.4. Where discrepancies or errors are noted on the drawings the contractor shall inform the engineer in good time.

17. DEMOLITION & TEMPORARY WORKS:

17.1. All proposed demolition and refurbishment works are subject to site inspection and verification on site, and may be revised due to actual site conditions.

17.2. The contractor is to "open up" areas as necessary to allow the architect assess the quality of all existing walls. these are to be rebuilt or repaired as required by the architect, superficial cracking may be repaired using expanded metal mesh and re-plastering.

17.3. All work is to conform with all relevant building, health and safety regulations.

17.4. It is of utmost importance that the contractors personnel chosen to carry out the work have experience in this type of building. the contractor and his staff are required to have an appreciation of the consequences of their actions when removing existing support whether permanent or temporary.

17.5. It is the contractors responsibility to ensure safety of adjoining structures. these structures are deemed to be in a sound, plumb, level, crack-free condition unless proven otherwise and shall be left in existing condition at completion of the works. The contractor shall include for all necessary records, surveys and tell tales in relation to existing structures.

17.6. All work as outlined should be carried out strictly in accordance with the engineers drawings and specifications and the relevant British and Irish standards.

17.7. All new structure shown is "in place" structure. The contractor is to prepare and submit to the architect for approval, a method statement showing the proposed system of demolition, temporary support and new construction. This method statement is to be accompanied by temporary works drawings which are to be properly annotated and cross-referenced to it. In addition, any and all calculations required to verify how the existing stability and load transfer is to be maintained, must be submitted to, and approved by the architect before any work commences.

17.8. Contractor to submit suitable temporary design to PSDP, Engineer and Architect for review.

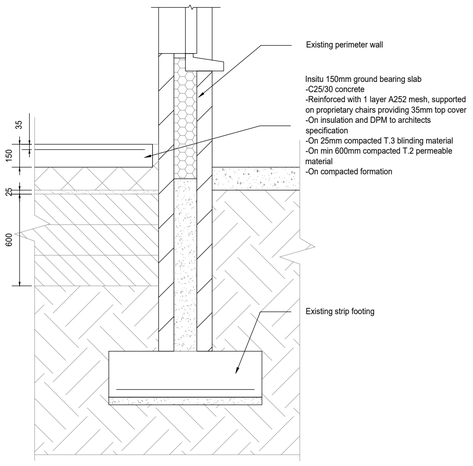

D01 - Typical ground floor slab detail

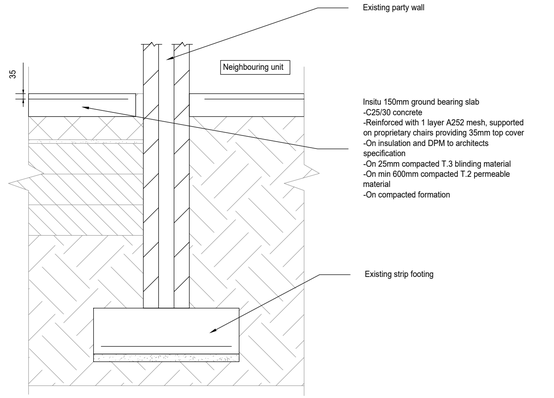

D02 - Typical ground floor slab detail

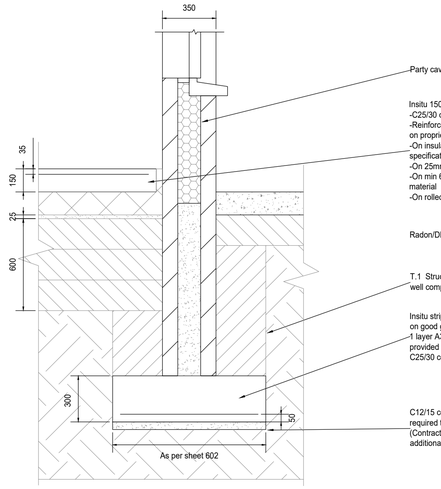

D01 - Typical ground floor slab detail

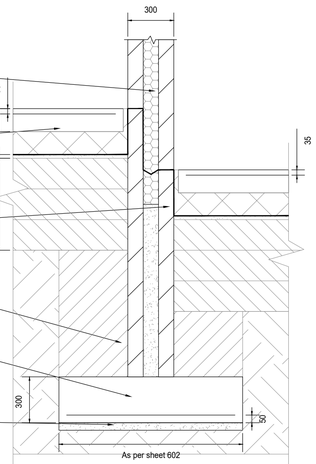

D02 - Typical party wall foundation detail

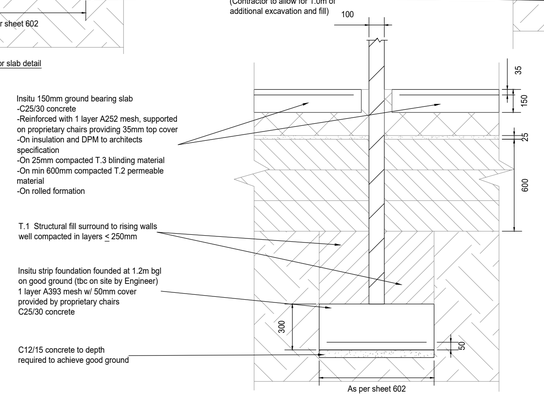

D03 - Typical internal load bearing wall foundation detail

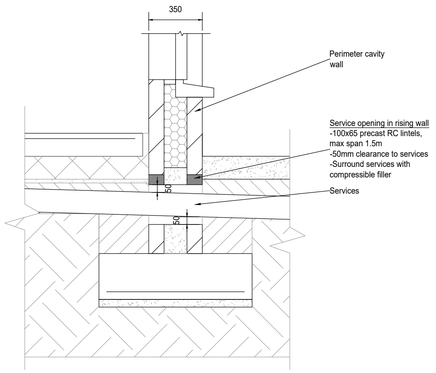

D06 - Typical rising wall service protrusion detail

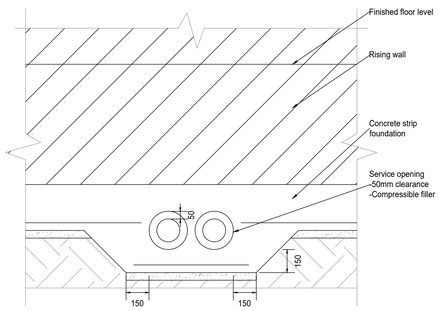

D07 - Foundation service protrusion detail

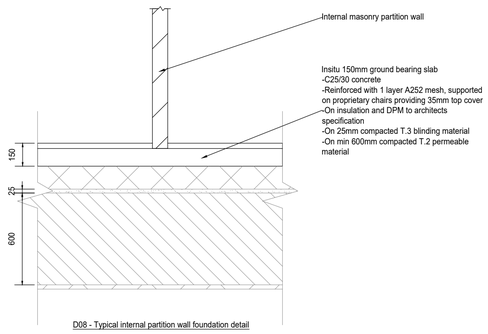

D08 - Typical internal partition wall foundation detail

COPYRIGHT:
The design and details shown on this drawing are applicable to their project only and may not be reproduced in whole or in part or be used for any other project or purpose without the written permission of Limerick City and County Council with whom copyright resides.

DO NOT SCALE from this drawing. Use figured dimensions. Contractor to check all dimensions on site prior to commencement of works. Any discrepancies are to be referred to the ARCHITECT.

Drawing to be read in conjunction relevent sections of Architectural specification document.

GENERAL NOTES;

1. EXISTING ROOFS TO NO.89 LEINIHAN TO BE CAREFULLY STRIPPED BACK AND BATTENS TO BE REMOVED. INSTALL NEW TANALISED COUNTER BATTENS (50 x 44mm) AND TREATED 50 x 32mm BATTENS. NEW ROOF TILES TO MATCH EXISTING. USE EXISTING STOCK WHERE POSSIBLE. ALL OTHER HOUSES ARE TO HAVE FIRE BATTS FITTED TO THE VOIDS BETWEEN THE PARTY WALLS AND THE ROOF TILE/ SLATE FINISH.
2. NEW FASCIA SOFFIT, GUTTERS AND DOWNPIPES TO BE FITTED.
3. MAIN CONTRACTOR TO ENSURE THAT PARTY WALLS TO ADJOINING DWELLINGS HAVE MIN. 60 MINUTE FIRE RATING FROM GROUND LEVEL TO RIDGE - I.E. OVER TWO FLOORS AND ATTIC SPACE.
4. SOLVENT FREE SEALANT TO WINDOW AND ALL OTHER JUNCTIONS.
5. MAIN CONTRACTOR TO ENSURE ALL SURFACE AND FOUL WATER DISCHARGES CORRECTLY TO PUBLIC SYSTEMS AND MUST AMEND/ MOVE EXISTING MANHOLES/ A/S ETC. WHERE DEEMED NECESSARY.
6. FIRESTOPPING TO ROOF AND PARTY WALLS TO BE PROVIDED IN ACCORDANCE WITH DIAGRAM 10 OF TGD B 2017.
7. ADJOINING PROPERTIES TO BE ADEQUATELY PROTECTED DURING CONSTRUCTION.
8. ALL EXISTING SKIRTING BOARDS, ARCHITRAVES, WINDOW BOARDS ETC. TO BE REMOVED. NEW JOINERY AS SPECIFIECD
9. EXISTING STAIRS TO BE STRIPPED, SANDED, PRIMED AND PAINTED WITH TWO UNDERCOAT COATS AND TWO MATT GLOSS COATS UNLESS SLATED FOR REPLACEMENT.
10. ALL GLAZING TO COMPLY WITH BS 6262 1994/ CURRENT EU EQUIVALENT.
11. ALL OPES TO BE CONFIRMED ON SITE BEFORE FABRICATION.
12. FIRE RESISTANCE OF DOORS IS DETERMINED IN TGD 2017. ENSURE ALL NEW DOOR ASSEMBLIES/ DOOR SETS COMPLY WITH THE FIRE RESISTANCE REQUIREMENTS OF TGD 2017.
13. FRONT DOORS - IF REQUIRED ARE TO HAVE LETTER BOXES, SPY HOLES, INTERNAL THUMB TURN LOCKS INSTALLED.
14. SIDE AND REAR DOORS ARE TO HAVE INTERNAL LEVER HANDLE LOCKS INSTALLED.
15. SKIRTINGS AND ARCHITRAVES: SELECTED PAINTED MDF/ SOFTWOOD SKIRTINGS AND ARCHITRAVES. INTERNAL DOORS TO BE PAINED ON BOTH SIDES OF SOLID CORE DOOR AND DOOR FRAMES. IRONMONGERY TO COMPLY WITH THE FIRE RATING OF THE DOOR.
16. INTERNAL DOOR IRONMONGERY; TO BE SATIN FINISHED STAINLESS STEEL FINISH AND IS TO INCLUDE FOR THE FOLLOWING; 1 pair of stainless steel lever handles · one pair of stainless steel roses · sash lock and dead lock · 1 pair brushed stainless steel escutcheons · 3 no. hinges to manufacturers recommendations · 1 no. doorstop

REVISIONS

DATE	REV.	BY.	CH.	DESCRIPTION
01.03.21	T1	RD		Issued for tender

Limerick City and County Council
Design and Delivery Services
Merchants Quay
Limerick

PROJECT:
HR01 House Refurbishments

STAGE:
Contract & Construction

DRAWING TITLE:
Structural Sheet Details - Sheet 1

DATE:	Dec 21	DRAWING NO:	110
SCALE:	1/20		
DRAWN:	CL	SHEET SIZE: A1	REVISION: T1
CHECKED:	-		
JOB NO:	HR01 T1		